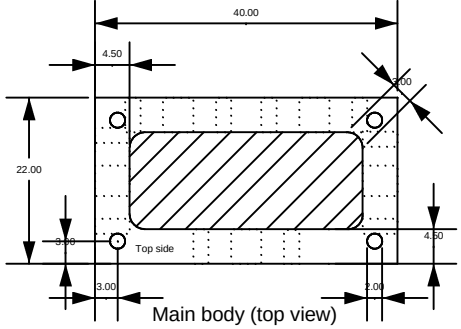

Main body (top view)

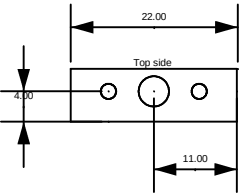

Main body (left & right view)

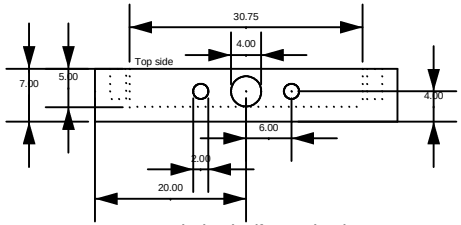

Main body (front view)

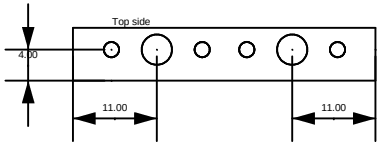

Main body (back view)

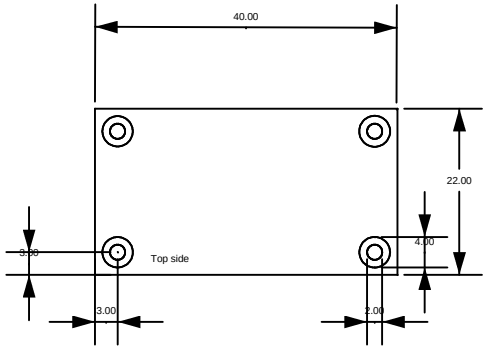

Lid (top view)

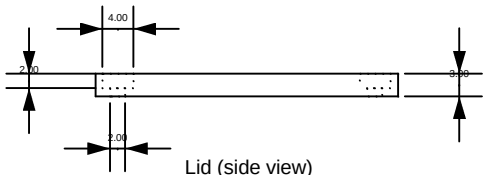

Lid (side view)